Model No. DC10SB BATTERY CHARGER

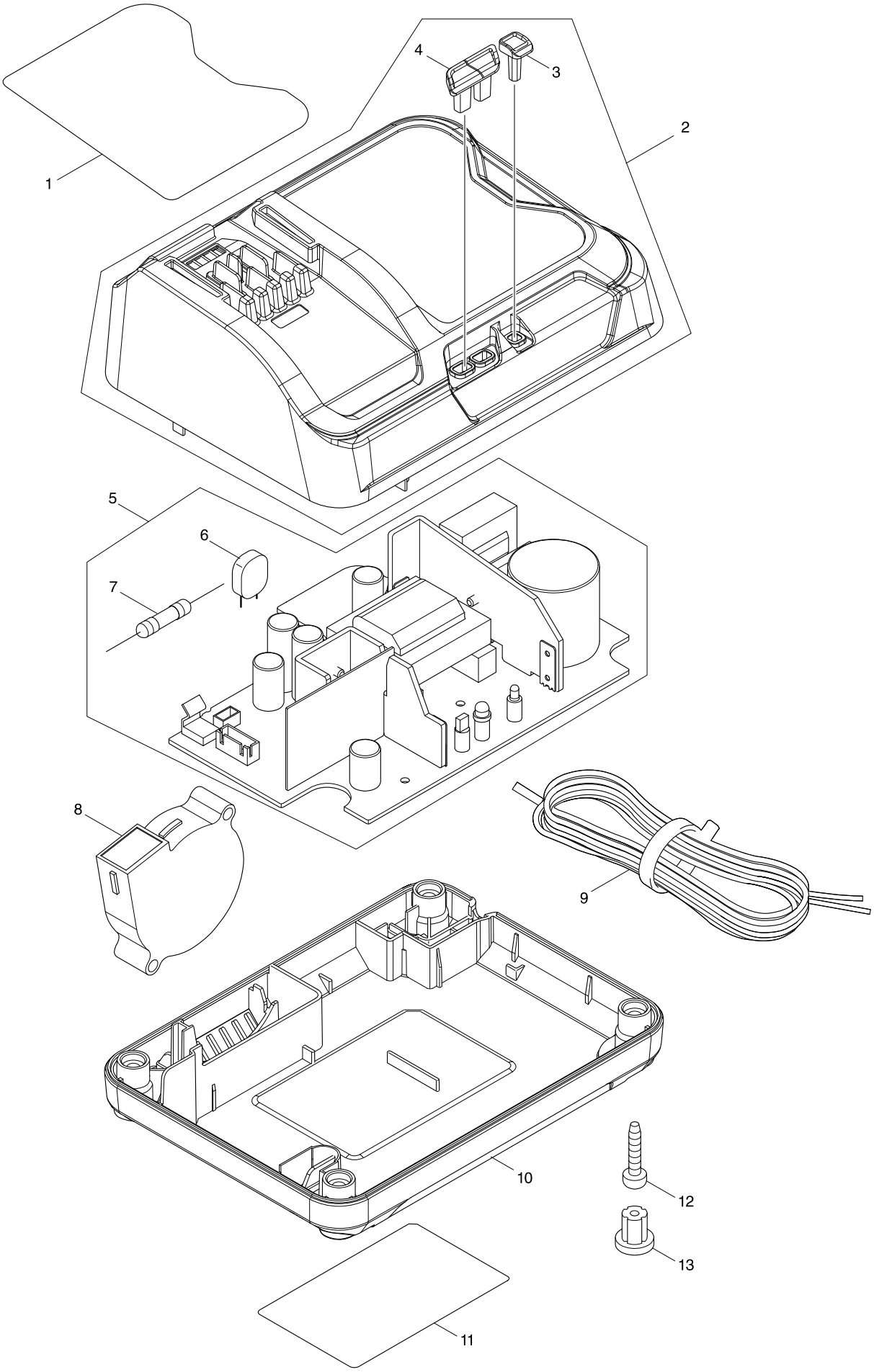

Model No. DC10SB BATTERY CHARGER

Item	Parts No.	Description	I/C	Qty	N/O	Opt. 1	Opt. 2	Note
001	807B60-3	CHARGING CONDITION LABEL		1				
002	143280-6	CHARGER CASE COMPLETE		1				
D10		INC. 3,4						
003	456049-2	LENZ		1				
004	455959-0	LENZ		1				
005	620431-3	CHARGING CIRCUIT		1				
D10		INC. 6,7						
006	647069-9	VARISTOR		1				
007	652804-2	FUSE		1				
008	638499-5	SCIROCCO FAN		1				
009	667985-9	VINYL CORD 0.75-2-2.0		1				
010	456048-4	CHARGER CASE COVER		1				
012	266346-6	TAPPING SCREW BT 4X20		4				
013	286255-3	CAP 13		4				

Please order the parts with a part number.

Print Date 16/02/2018