Model No. 198634-2

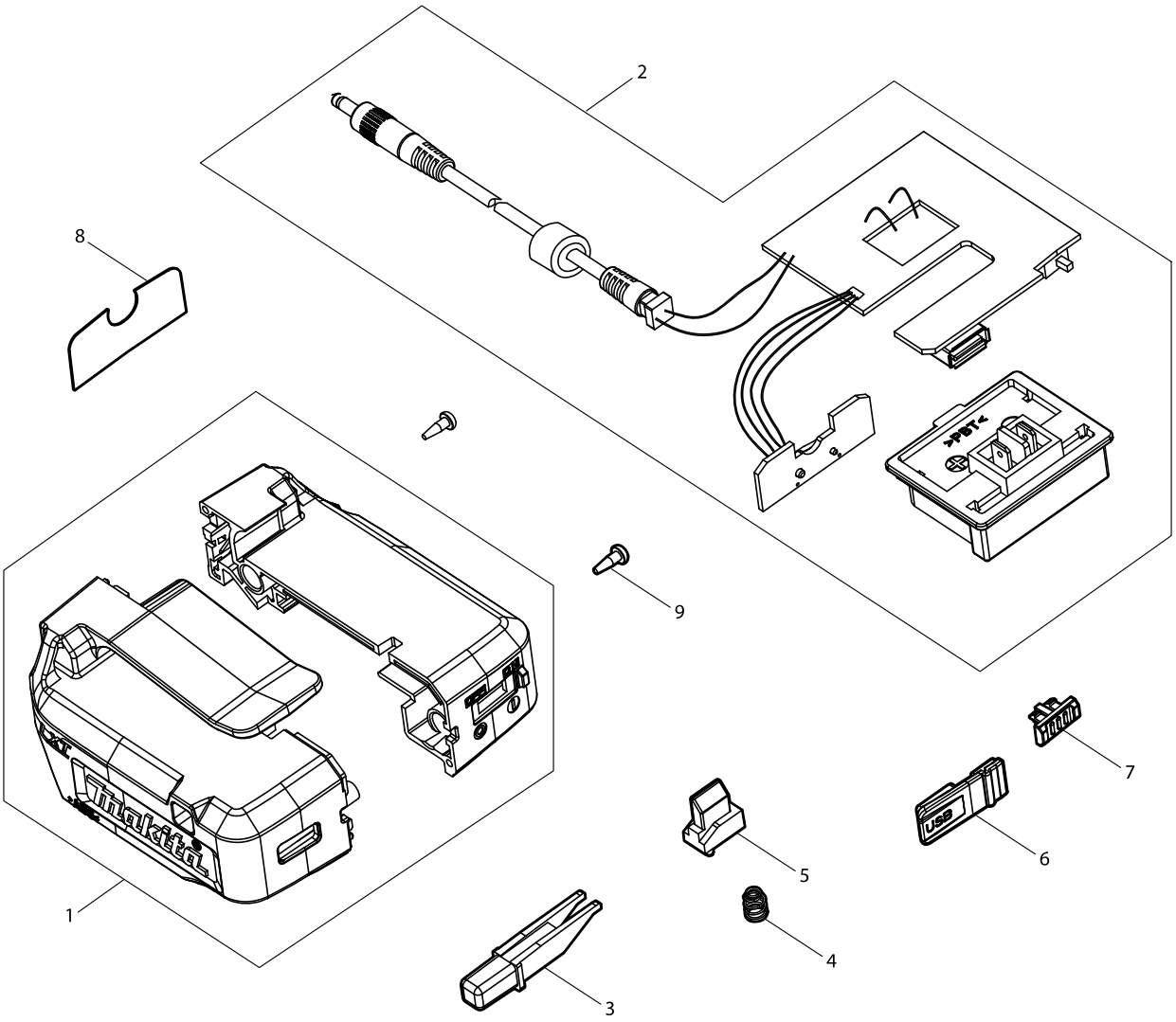

Model No. 198634-2

Item	Parts No.	Description	I/C	Qty	N/O	Opt. 1	Opt. 2	Note
001	GM00001530	BODY L/R ASSEMBY ROS84780300		1				
002	GM00001946	MAIN PCBA FOR LXT		1				
003	GM00001536	LOCK KNOB C3090478001		1				
004	GM00001537	SPRING B1308478091		1				
005	GM00001538	BELT LOCK C3090478002		1				
006	GM00001533	USB RUBBER COVER C9990478001		1				
007	GM00001534	SWITCH KNOB C0190478002		1				
008	GM00001405	SWITCH LABEL		1				
009	GM00001535	SCREW 2.6X12PB B0126121702		2				

Please order the parts with a part number.

Print Date 15/02/2018